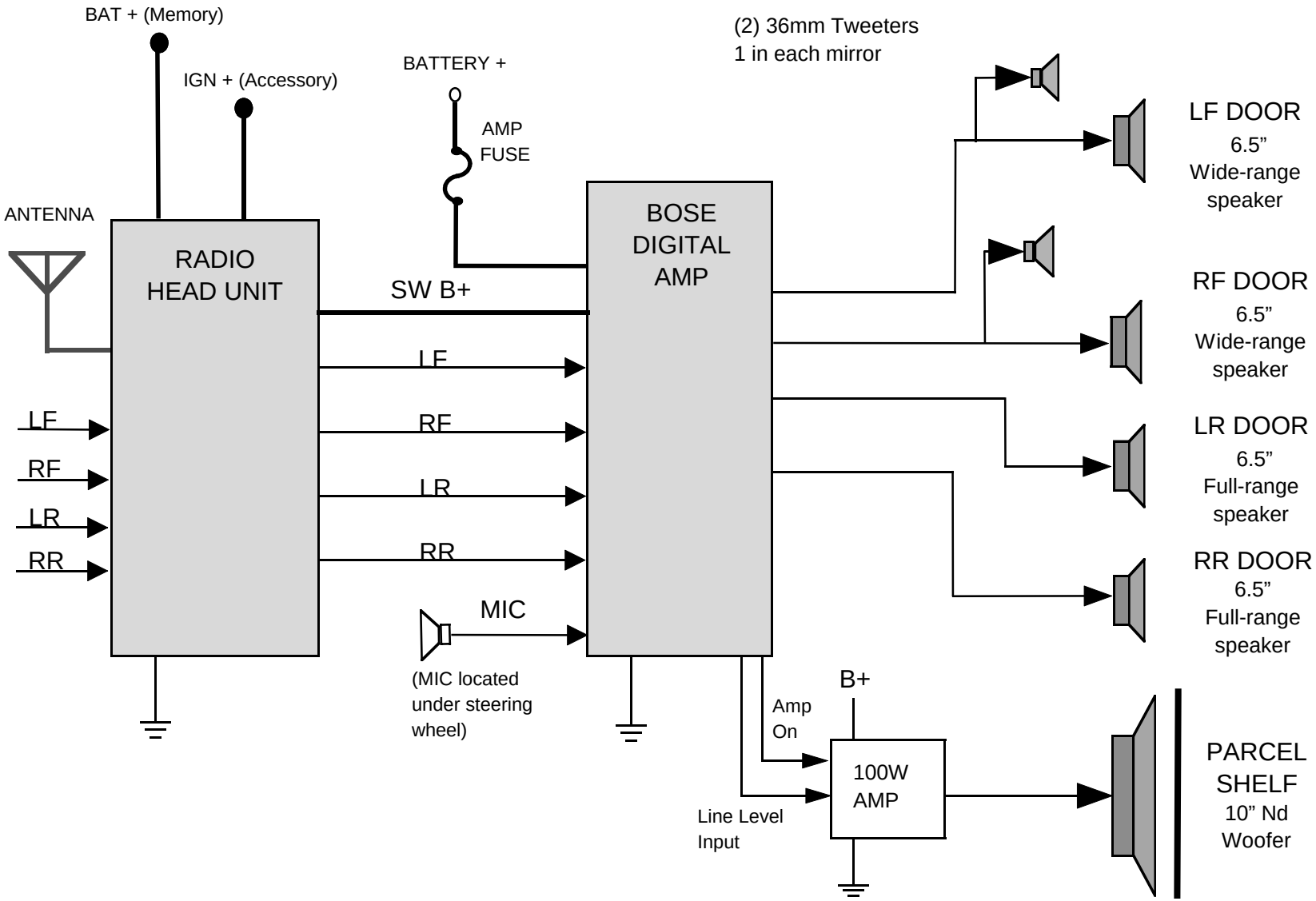

Bose Music System® Functional Block Diagram
Nissan 350Z (GI)

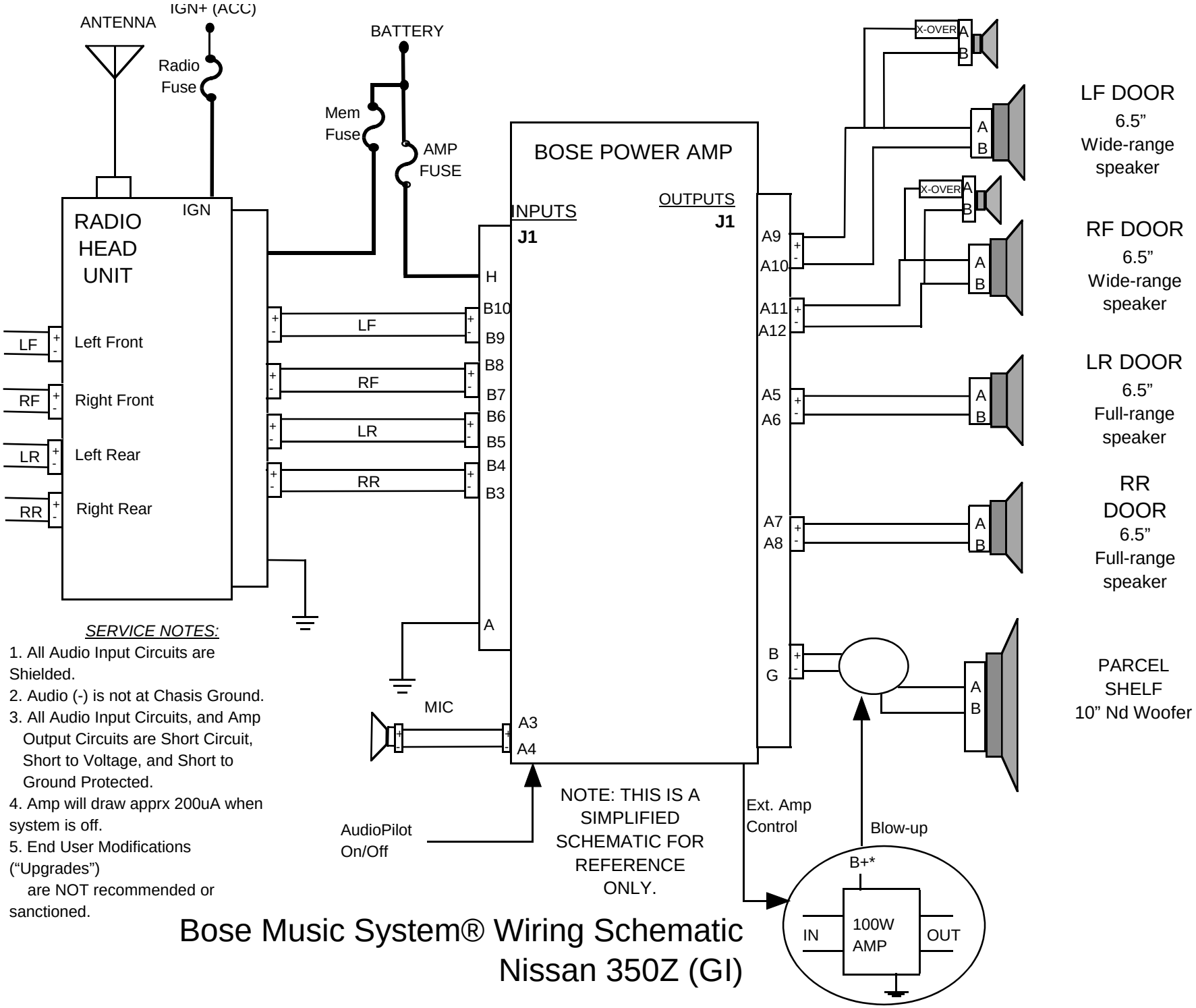

SERVICE NOTES:

1. All Audio Input Circuits are Shielded.
2. Audio (-) is not at Chasis Ground.
3. All Audio Input Circuits, and Amp Output Circuits are Short Circuit, Short to Voltage, and Short to Ground Protected.
4. Amp will draw apprx 200uA when system is off.
5. End User Modifications (“Upgrades”) are NOT recommended or sanctioned.

Bose Music System® Wiring Schematic
Nissan 350Z (GI)